LOWER SKIN PANEL - WING CENTER TANK

CW-205
C-218
GREEN

This is a section of skin panel and stringer that extends from S-4 to the midspar (S-10) and from the left SOB to approx RBL ~~20~~ 92.0. There are portions of stringers S-5 through S-8 and mid spar which remain attached.

The stringer S-5 is intact and remains attached to the skin panel. The stringer at SWB1 is intact from the left SOB to RBL 11 and is separated from the panel from RBL 11 to RBL 23. The SWB1 stringer is fractured at LBL 107 and the stringer inbd and outbd at that point is separated from the skin panel. The S-7 and S-8 stringers are complete out to RBL 11 and RBL 33 respectively, but only remain attached to this section at the SOB paddle fittings. Both these stringers are bent and twisted in all directions. The S-9 stringer and paddle fitting at left SOB is not attached. Only the aft skin flange of the midspar stringer remained attached to this panel. The panel has a fracture running from LBL 16 at the mid spar to LBL 13 between S-7 and S-8. There is a fracture running down the fastener line at SWB#1 from RBL 58 to RBL 13. The panel is bent in "S" shape from left SOB to RBL 70. The skin attach flanges of the shear ties for the BL0 rib remained attached. There is a puncture in the skin panel 6" fwd of SWB1 at LBL 37 with the surrounding skin deflected down. The remaining rivets in the skin panel at S-8 and S-9 exhibit inboard/outboard shear. The Keel beam attachment tension fittings at SWB1 remained intact on the top side of the panel at both LBL 9 and RBL 9. The tension fitting on the lower side of the panel remained attached at LBL 9 only. The tension fittings of the keel beam at the midspar are not attached. The holes through the panel and mid spar chord exhibit no elongation. The keel beam "T" chord on the lower side of the panel has fractured off with vertical flange being torn away. There are fairing support rods partially attached to the lower surface of the skin .

The right end of this panel is highly deformed. The general shape of this portion is an upward deflected dome that is as much as 14" high in relation to the adjacent structure. The dome is centered about RBL 57.5 at S-8. The sections around this area including CW-232, CW-231, and CW-201 exhibit this same general shape.

There is a spike-tooth fracture occuring at RBL 39 just fwd of S-9. See the metalurgical report for complete details.

The fastener failure direction in the shear tie is noted in the shear tie study.

There is soot on the interior and exterior surfaces of the panel. This is documented in Fire and Explosion Group notes.

R. Geachth IAM 12-6-96
SD GREEN 12-6-96
ALPA

Stephen F. Klapach Jr.
FAA 12-06-96
[signature] TWA 12-6-96
[signature] BOEING 12/7/96

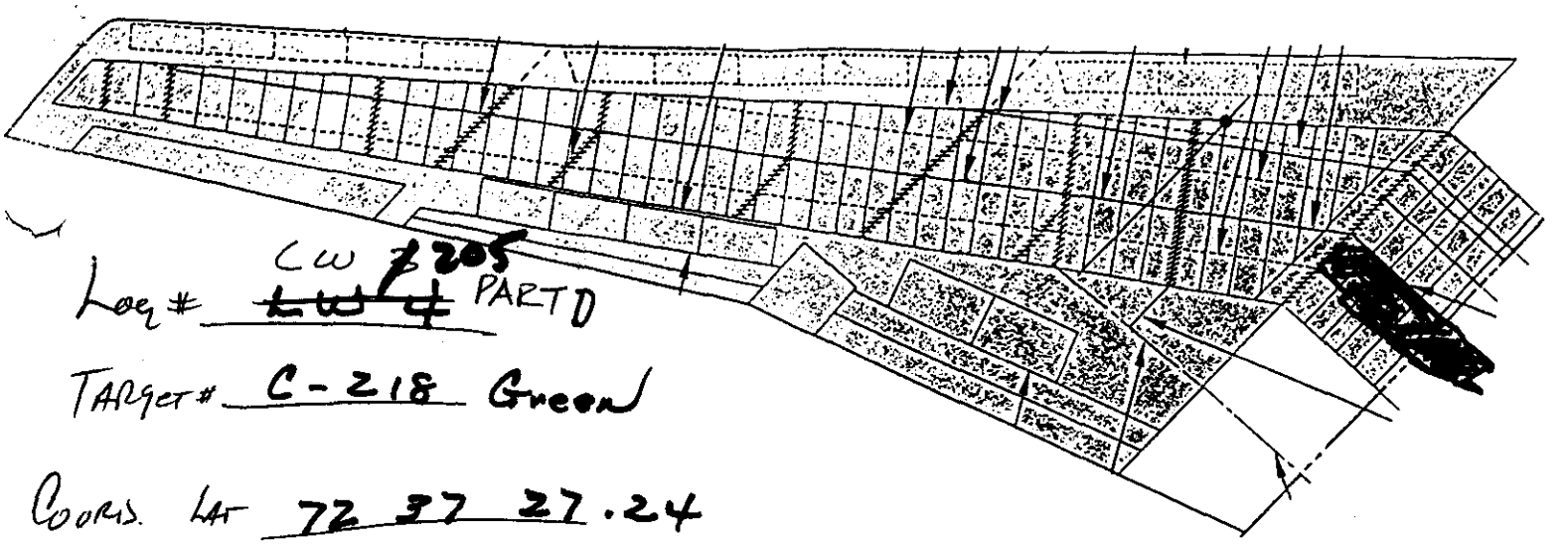

Log # ~~LW 4~~ CW 205 PART D

TARGET # C-218 Green

COORD. LAT 72 37 27.24

LONG 40 39 50.14

DEBRIS FIELD

1. Rib is seperated from str 11 the entire Length. The seperation shows sign of soot. ?
2. External skin R/H side OB of the Keel beam is sooty & dirty.
3. There are several punctures between strs ~~10~~ 6 & ~~11~~ 7 at approximately RBL ?18 & RBL 40. These punctures are protruding from inside the tank outward. (down)
4. Vertical flange is seperated from the mid-spar and only portions of the horizontal portion of the mid-spar is attached. Remaining sections of the mid-spar are bent & twisted.

SEE ATTACHED SKETCH FOR MORE DETAILS

Pg 11

T.A. McKINNEY

2

CW-205 GREEN TAG # C212

PART D

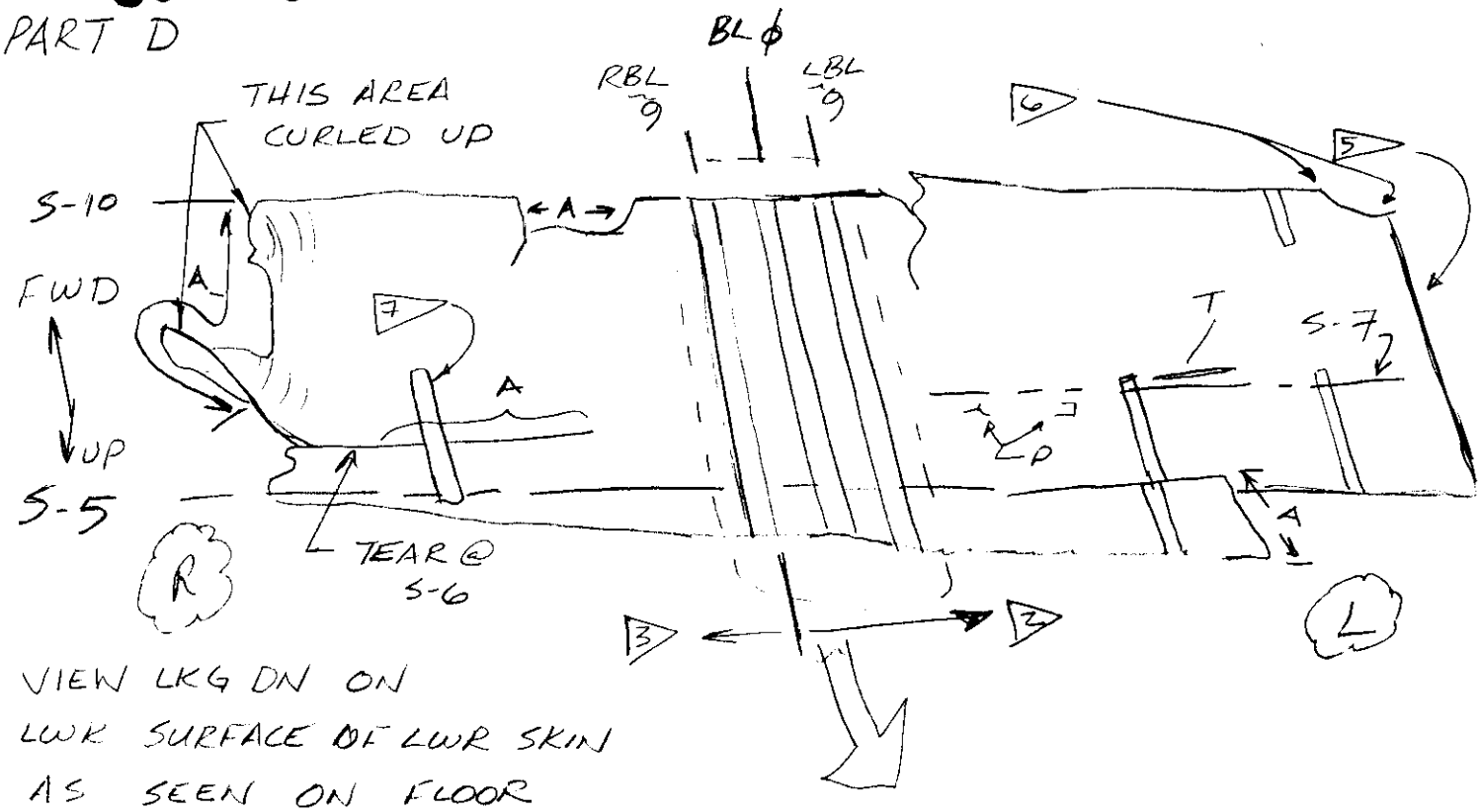

VIEW LKG DN ON LWR SURFACE OF LWR SKIN AS SEEN ON FLOOR

P = PUNCTURES BOTH ~2" DIA FROM INSIDE OUT

T = TEAR, ~10" LONG PUSHED INSIDE-OUT

A = ANGLED FRACTURE FACE - SEE PART G

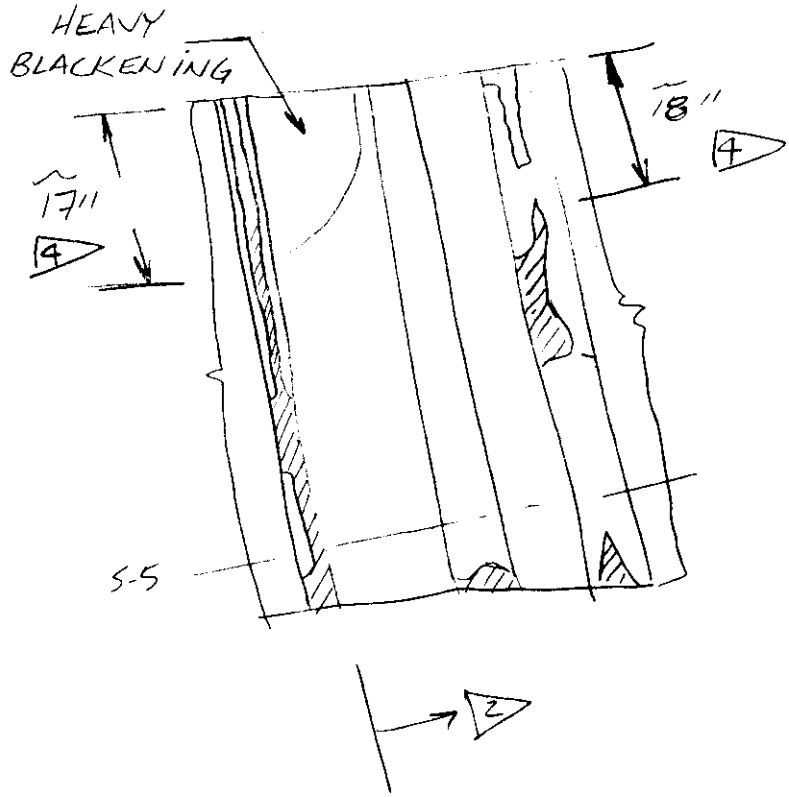

GREEN PRIMER WHERE CHORDS TORN OFF

PART D {CONT'D}

2> BOTTOM SURFACE IS IDENTICAL TO LHS PART A

3> " " " " RHS PART A

4> WHERE CHORDS TORE OFF & EXPOSED PRIMER, IS BLACKENED

5> FRACTURED THRU SPLICE PLATE, NO SIGN OF BLACKENING - NOTE ON UPPER SURFACE OF LWR WING SKIN IS HEAVY BLACKENING
(PART UPSIDE DN ON FLOOR - LOOKING UNDER EDGE)
MATES W/ LW-7

6> TWO VERY LOCALIZED AREAS OF BLACKENING ON FRACTURE SURFACES, OTHER WISE BLACK FREE

7> UNDER WING CHORD & STIFFENER, SHOWS SIGN OF HEAT DAMAGE PRIMARILY LOSS OF PROTECTIVE FINISH

GENERAL

- LHS OF UPPER SURFACE APPEARS TO HAVE DARKER BLACKENING THAN RHS
- 3 STRINGER SEGMENTS ATTACHED